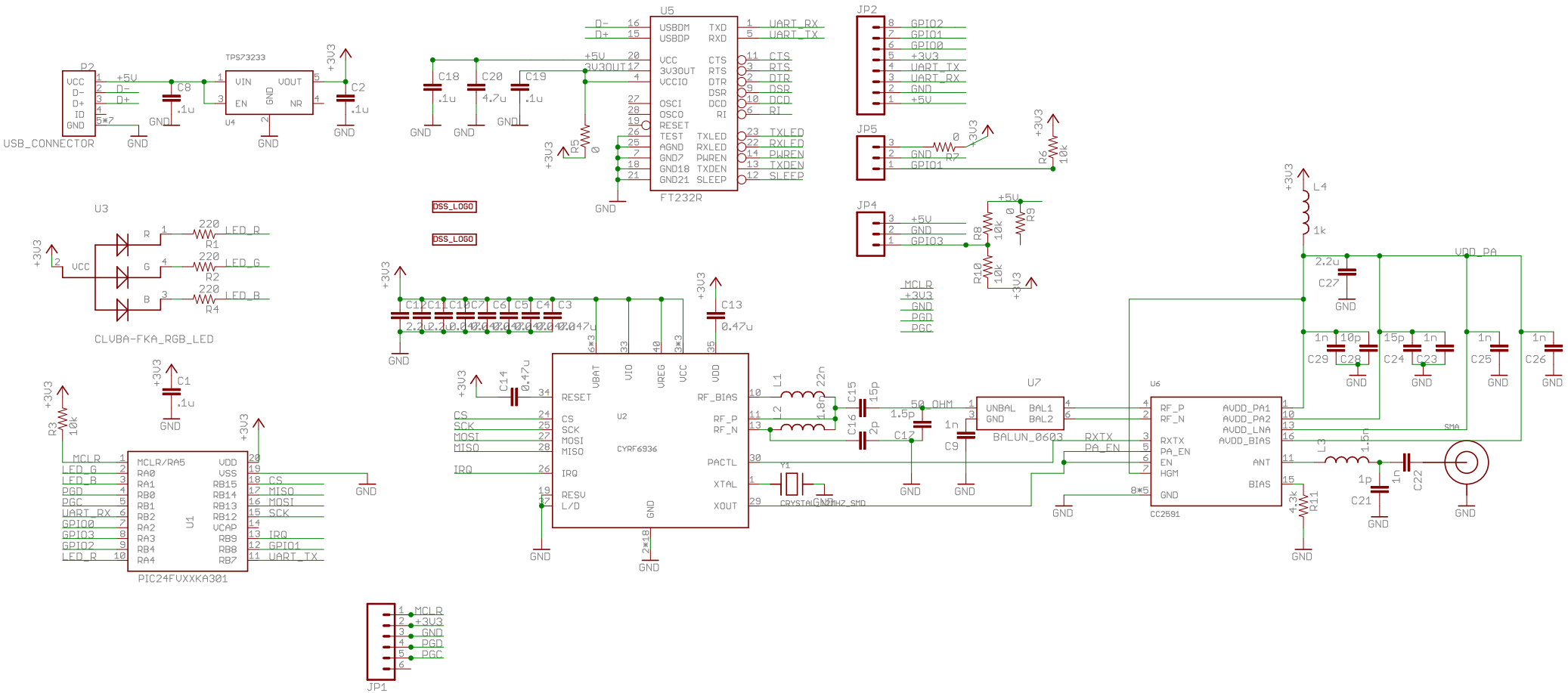

5/14/2014 2:32:35 PM f=0.75 D:\azure_dev\eagle\pcb\guardian_node\tag\super\guardian_node.sch (Sheet: 1/1)