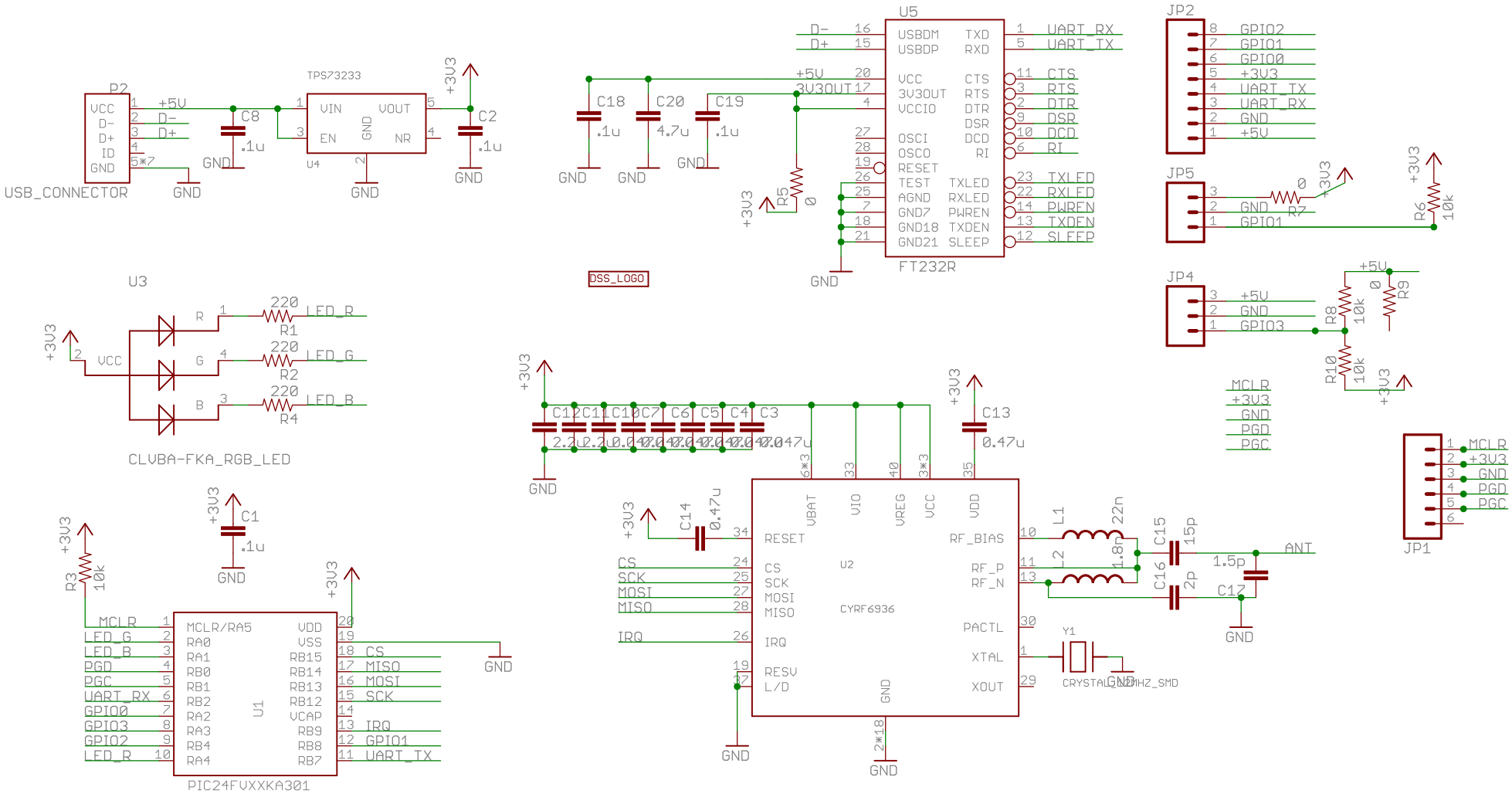
P2
USB_CONNECTOR
VCC
D-
D+
ID
GND
+5V
C8
.1u
TPS73233
VIN
EN
GND
VOUT
NR
U4
C2
.1u
+3V3
U5
FT232R
USBDM
USBDP
VCC
3V3OUT
VCCIO
OSCI
OSCO
RESET
TEST
AGND
GND7
GND18
GND21
TXD
RXD
CTS
RTS
DTR
DSR
DCD
RI
TXLED
RXLED
PWREN
TXDEN
SLEEP
UART_RX
UART_TX
C18
C20
C19
R5
0
DSS_LOGO
JP2
GPIO2
GPIO1
GPIO0
JP5
R7
R6
10k
JP4
R8
R9
R10
U3
CLVBA-FKA_RGB_LED
LED_R
LED_G
LED_B
R1
R2
R4
C12
C11
C10
C7
C6
C5
C4
C3
C13
0.47u
C14
L1
L2
22n
1.8n
C15
15p
C16
2p
1.5p
C17
ANT
Y1
CRYSTAL_12MHZ_SMD
U2
CYRF6936
VBAT
VIO
VREG
VCC
VDD
RESET
CS
SCK
MOSI
MISO
IRQ
RESV
L/D
RF_BIAS
RF_P
RF_N
PACTL
XTAL
XOUT
JP1
MCLR
PGD
PGC
R3
10k
C1
.1u
U1
PIC24FVXXKA301
MCLR/RA5
RA0
RA1
RB0
RB1
RB2
RA2
RA3
RB4
RA4
VDD
VSS
RB15
RB14
RB13
RB12
VCAP
RB9
RB8
RB7